Data Sheet

Article number: 20853160TTNI
Description: E+G Latch clamp with locking mechanism
GN 853-160-TT-NI

Measures

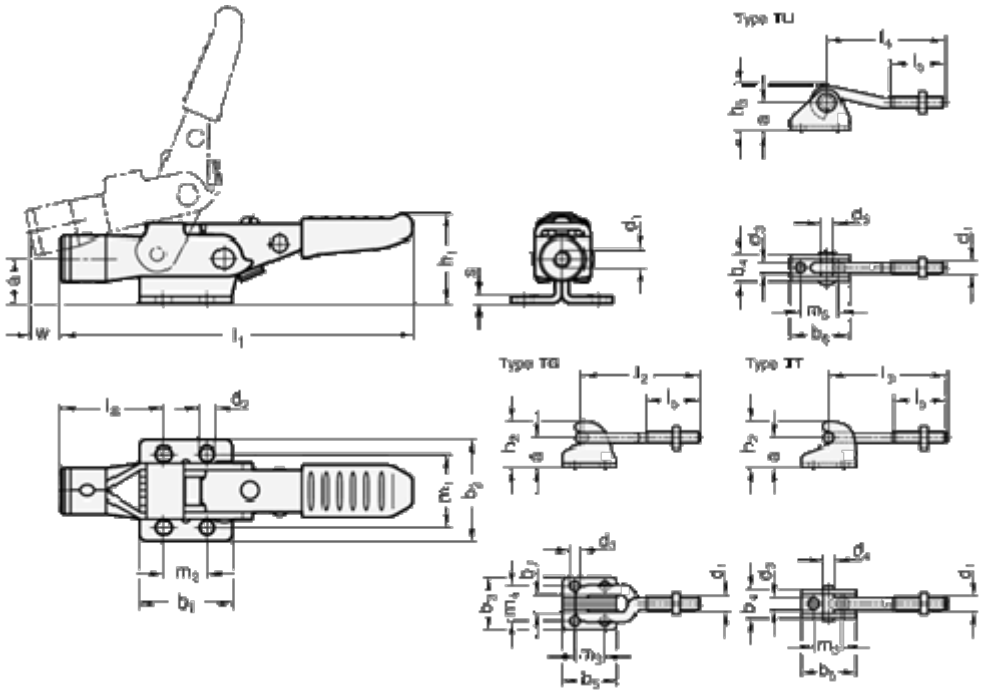

a = 13	d1 = M6	Holding force N = 1750	m2 = 16.0
b1 = 26	d2 = 4.5	l1 = 103	m3 = 16
b2 = 28	d3 = 4.5	l2 = 55.0	m4 = 14.3
b3 = 23	d4 = 5.2	l3 = 55.0	m5 = 25.4
b4 = 14	d5 = 6	l4 = 54.0	s = 2.0
b5 = 26	h1 = 27.0	l5 = 28	Size = 160
b6 = 35	h2 = 20.0	l6 = 30.0	w = 8
b7 = 6.8	h3 = 20.5	m1 = 19	

Product drawings and brochures of any kind may contain errors for which Brd. Klee A/S cannot be liable.